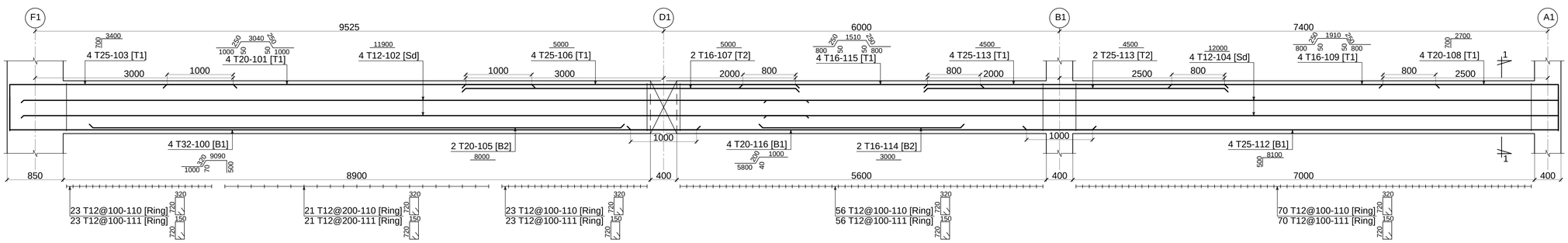

B1 (1 Nbr)
(400x800)
Scale:1/50

B1 (1 Nbr)
(400x800)
Scale:1/50

B1 (1 Nbr)
(400x800)
Scale:1/50

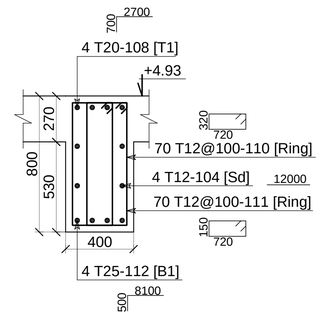

Section 1-1
Scale:1/25

Beam Ref
BR1